72.6-11290-11.3

STATE OF WISCONSIN

DEPARTMENT OF TRANSPORTATION

DIVISION OF HIGHWAYS

PLAN AND PROFILE OF PROPOSED

S.T.H. 86 - CLIFFORD
C.T.H. "YY"
LINCOLN & PRICE COUNTY
PROJECT S 1129(3)

Index of Sheets

Sheet No.	1	Title
Sheet No.	2	Typical Cross Sections
Sheet No.	3	Estimate of Quantities
Sheet No.	3A	Miscellaneous Quantities
Sheet No.	—	Right of Way Plat
Sheet No.	4-9	Plan and Profile Sta. 18+80 to Sta. 187+00.
Sheet No.	10-10.7	Standard Details
Sheet No.	11-12	Drainage Structures
Sheet No.	13-22	Machine Computations

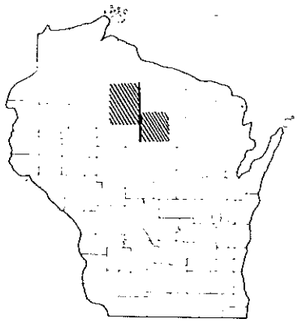

Scales { Plan 1 in. 100 ft. Profile Horiz. 1 in. 100 ft. Vert. 1 in. 10 ft. Cross Sect. Horiz. 5 FT. Vert. 1 in. 5 FT.

APPROVED FOR LINCOLN COUNTY

Francis X Cox

MAY 6 1968 COUNTY HIGHWAY COMMISSIONER

Date Title

Design Designation

A.D.T.	1968	= 100
A.D.T.	1988	= 200
D.H.V.		= 30
D.		= 65%
T.		= 20%
V.		= 50 M.P.H.

END OF PROJECT S 1129(3)
STA. 187+00 = STA. 187+00 BEGINNING OF PROJECT S1129 (2)
1334' N. & 14' W OF THE SW COR. OF SEC. 19, T35N, R4E.
STA. 37+90, PROJ. S1129(3) = STA. 19+00, END PROJ. S 1129(1)
STA. 30+46.5 TO STA. 31+09.5
EXCEPTION TO NET ℄ LENGTH
STA. 26+90 PROJ. S 1129 (3) = STA. 8+00 BEG. PROJ. S 1129(1)

BEGIN PROJECT S 1129(3)
STA. 18+80
11' N. of the N.W. Cor.
Sec. 7, T34N, R4E

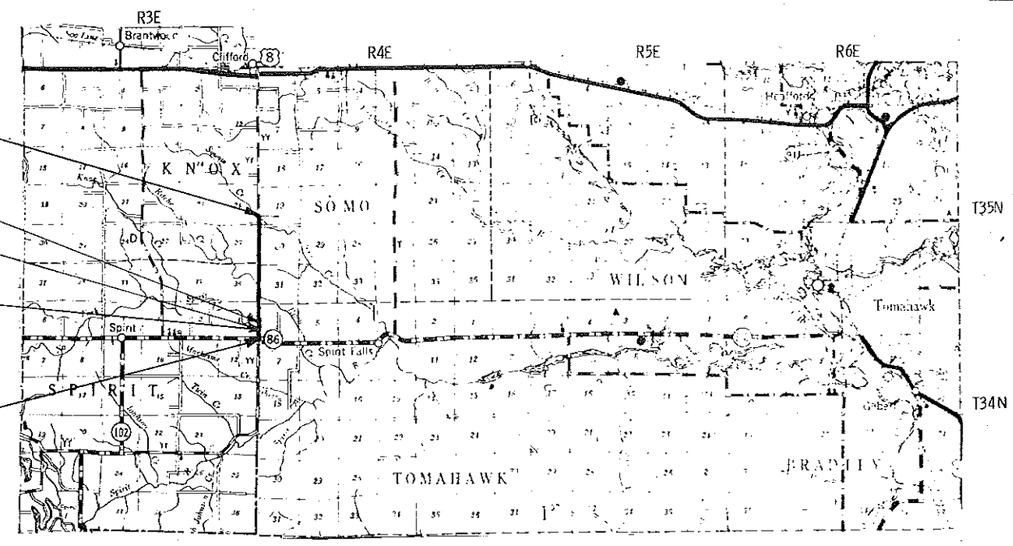

N

Conventional Signs

State Line
County Line
Township or Range Line
Section Line
New Right of Way Line
Present Right of Way Line
Wire Fence { Woven / Barbed
Lot Line
Corporate or City Limits
Property Line
Traveled Way or P.E.
Railroads
Base or Survey Line

Culverts in Place
Culverts Required
Drop Inlet
Power Pole
Telephone or Telegraph Pole
Right of Way Markers
Reference Stake for Hubs Only
Marsh
Hedge
Trees
Ground Elevation — Datum Line
Grade Elevation — Datum Line

Layout

Scale 2 MILES

Total Net Length of Center Line = 3.174 Mi.

STATE OF WISCONSIN
DEPARTMENT OF TRANSPORTATION
DIVISION OF HIGHWAYS

Surveyed J.W.
Drawn Computed E.M.
Design Checked WINAT

Correct:

Date 4/25/68 MPA

Recommended for Approval:

Date 4/23/68 E.J.

Approved:

Date 4/26/68 Sta.

U.S. DEPARTMENT OF TRANSPORTATION
FEDERAL HIGHWAY ADMINISTRATION
BUREAU OF PUBLIC ROADS

Approved:

Date

S 1129(

B P R REG.	PROJECT
	S 1129(3)

9434-2-70

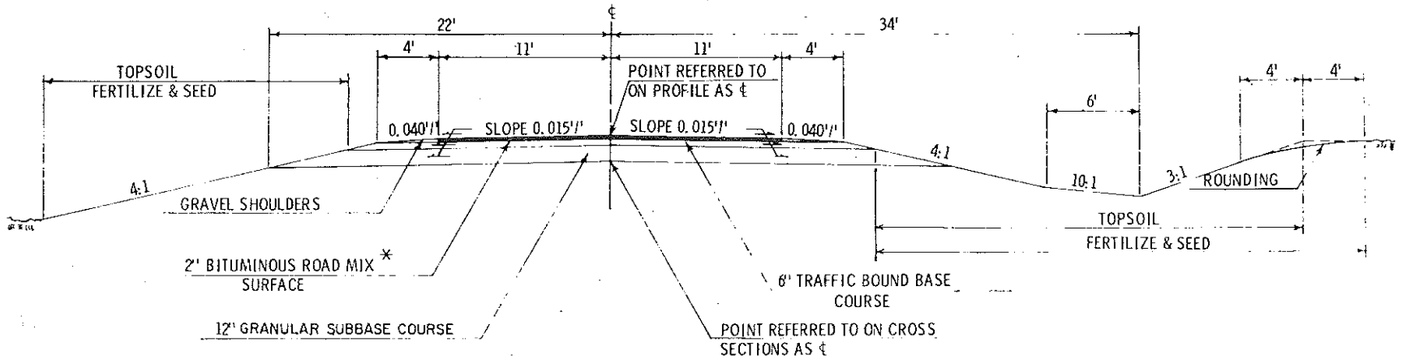

FINISHED SECTION

STA. 18+80 - STA. 187+00

* NOT PART OF THIS CONTRACT

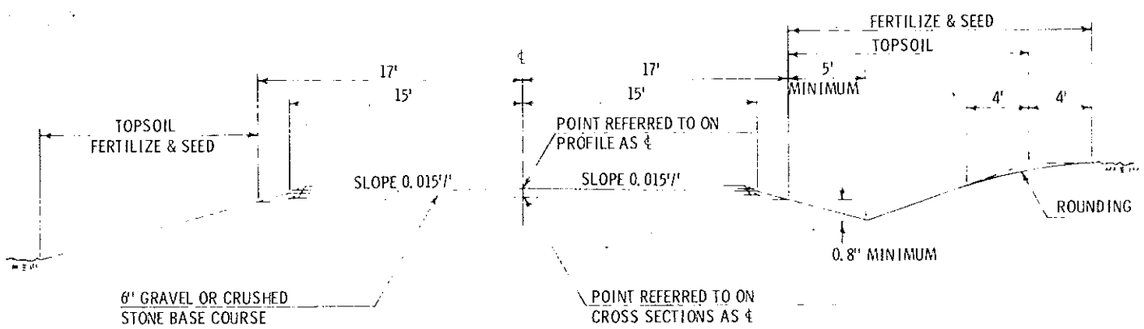

FINISHED SECTION SHOWING SIDE ROAD GRAVEL SURFACE

STA. 173+66 LT. & RT.

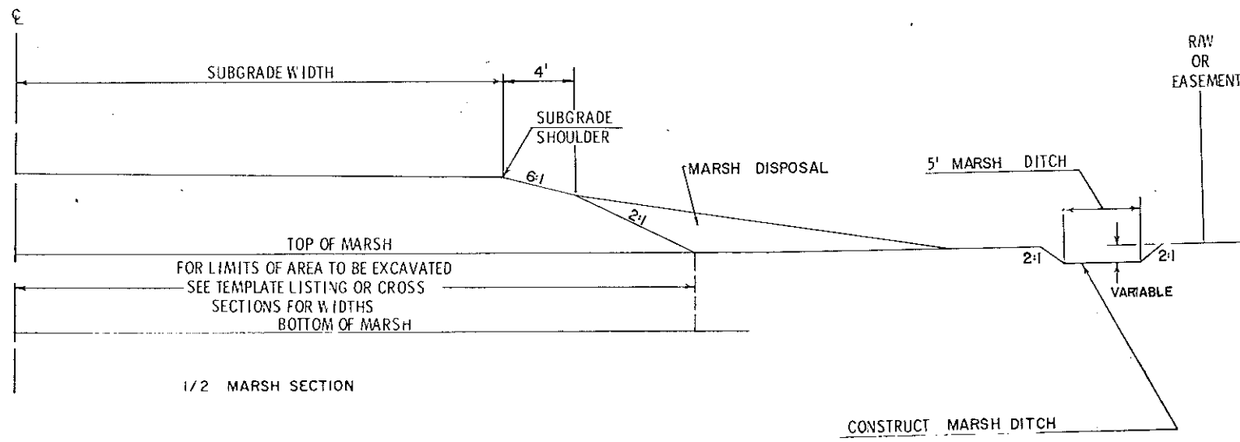

1/2 MARSH SECTION

AT LOCATIONS AS DIRECTED BY
THE ENGINEER.

TYPICAL S

B.P.R. REGION	PRO.
	S 112

9434-

ESTIMATE OF QUANTITIES

THIS PROJECT IS TO BE EXECUTED UNDER THE STANDARD SPECIFICATIONS FOR ROAD AND BRIDGE CONSTRUCTION OF THE STATE HIGHWAY COMMISSION OF WISCONSIN-EDITION OF 1963, APPROVED OCTOBER 16, 1963, FEDERAL AID REQUIRED CONTRACT PROVISIONS APPROVED OCTOBER 29, 1963, AND SPECIAL PROVISIONS AS ATTACHED TO PROPOSALS.

CONTRACT NO. 1

SEC. NO.	STATION TO STATION	NET LENGTH OF CENTER LINE	CLEARING	CLEARING	GRUBBING	GRUBBING	REMOVING OLD BRIDGE, STATION 86+32	UNCLASSIFIED EXCAVATION	MARSH EXCAVATION	EXCAVATION FOR STRUCTURES, BRIDGES	BORROW EXCAVATION	GRANULAR SUBBASE COURSE	FINISHING ROADWAY	TRAFFIC BOUND BASE COURSE	PRODUCING AND STOCKPILING AGGREGATE FOR BITUMINOUS ROAD MIX SURFACE	CONCRETE MASONRY, BRIDGES	BAR STEEL REINFORCEMENT, BRIDGES	CULVERT PIPE, CLASS III, 18-INCH	CULVERT PIPE, CLASS III, 24-INCH	APRON ENDWALLS FOR CULVERT PIPE, 18-INCH	APRON ENDWALLS, FOR CULVERT PIPE, 24-INCH	STRUCTURAL PLATE PIPE ARCH, 8 FT. SPAN	RIPRAP	HEAVY RIPRAP	STEEL PLATE BEAM GUARD	ANCHORAGES FOR STEEL PLATE, BEAM GUARD	MARKER POSTS FOR RIGHT OF WAY	MAINTENANCE AND REPAIR OF HAUL ROADS	SALVAGED
	ITEM NO		20101	20103	20104	20106	20351	20503	20505	20601	20801	21201	21301	30502	40411	50201	50501	52003	52005	52061	52063	52723	60601	60602	61410	61412	61422	61801	6
	UNIT	L.N.FT.	STATION	ACRE	STATION	ACRE	LUMP SUM	CU. YD.	CU. YD.	CU. YD.	CU. YD.	CU. YD.	LUMP SUM	TON	TON	CU. YD.	POUND	LIN. FT.	LIN. FT.	EACH	EACH	LIN. FT.	CU. YD.	CU. YD.	LIN. FT.	EACH	EACH	LUMP SUM	SC
	18+80 - 187+00	16,757.00	6	5.3	6	4.1	1	93,889	16,993	435	3,855	29,000	1	23,100	6,100	141.1	17,400	456	390	32	16	54	20	600	822	8	64	1	8
	TOTAL	16,757.00	6	5.3	6	4.1	1	93,889	16,993	435	3,855	29,000	1	23,100	6,100	141.1	17,400	456	390	32	16	54	20	600	822	8	64	1	8

SEC. NO.	STATION TO STATION	NET LENGTH OF CENTER LINE	SEEDING	SODDING	FIELD OFFICE
	ITEM NO		63001	63101	90001
	UNIT		SQ. YD.	SQ. YD.	LUMP SUM
	18+80-187+00	16,757.00	97,000	1,360	1
	TOTAL	16,757.00	97,000	1,360	1

APPLICABLE STANDARD DETAIL DRAWINGS

6-2.4.3	Mortar Rubble Masonry or Riprap for Culvert and Cattle Pass Endwalls
6-2.6.6	Apron Endwalls for Culvert Pipe and Pipe Arch
6-5.3.2	Structural Plate Pipe Arch & Corrugated Metal Pipe Arch
7-1.3.5	Marker Post & Marker Posts for Right of Way
7-2.4.13	Steel Plate Beam Guard & Steel Beam Median Guard
7-4.1.5	Construction Barricade
8-1.3.1	Ditch Checks, Mortar Rubble Masonry & Sod
9-1.1.5	Design and Layout Details for Side Road At Grade Intersections

GENERAL NOTES

1. When the quantity of the items of subbase, base or surface course is measu payment by the ton or cubic yard, the depth or thickness of the course show plans is approximate and the actual thickness will depend on the distributio material directed by the engineer.
2. Topsoil shall be placed to an approximate depth of 3" at the time of placing.
3. In balances containing marsh excavation, the fill quantity shown in the bal total on the plan sheets includes 10% of the marsh excavation as estimated s
4. E. B. S. all mouths of cuts as directed by the engineer in the field.
5. Bituminous Road Mix Surface not part of this contract.

B. P. R. REGION	PROJECT
	S 1129(3)

9434-2-70

CULVERT PIPE SCHEDULE

STATION	LOCATION ℄	LOCATION LT.	LOCATION RT.	CULVERT PIPE 18"	CULVERT PIPE 24"	STRUCTURAL PLATE PIPE ARCH 8 FT. SPAN 10-GAGE	APRON ENDWALLS 18"	APRON ENDWALLS 24"	RIPRAP
24+50			X	26			2		
29+00		X		26			2		
33+00			X	26			2		
35+53.		X		26			2		
41+50	X				54			2	
46+30		X		26			2		
50+24			X	26			2		
57+29	X				44			2	
60+39			X	26			2		
74+63	X				54			2	
74+82		X		26			2		
100+00		X		26			2		
113+54	X				64			2	
121+00	X				60			2	
132+64			X		26			2	
132+80		X			26			2	
140+50		X		26			2		
147+50			X	26			2		
152+00		X		26			2		
164+55	X				62			2	
171+10			X	26			2		
173+66			X	46			2		
173+66		X		46			2		
180+86	X					54			20 CU. YD
183+75			X	26			2		------
TOTAL				456	390	54	32	16	20 CU. YD.

MARKER POSTS FOR RIGHT OF-WAY

STA. - STA.	NO.
18+80- 40+00	13
40+00- 70+00	10
70+00-100+00	11
100+00-130+00	7
130+00-160+00	14
160+00-187+00	9
TOTAL	64

CLEARING AND GRUBBING

STA-STA	CLEARING ACRE	CLEARING STA.	GRUBBING ACRE	GRUBBING STA.
18+80 - 20+00		0		0
20+00 - 21+00		1		1
21+00 - 24+00		0		0
24+00 - 25+00		1		1
25+00 - 27+00		0		0
27+00 - 29+00		2		2
29+00 - 33+00		0		0
33+00 - 52+00	0.7		0.2	
52+00 - 77+60	1.1		1.1	
77+60 - 110+00	2.8		2.4	
110+00 - 123+00	0.4		0.1	
123+00 - 132+00		0		0
132+00 - 134+00		2		2
134+00 - 137+00		0		0
137+00 - 149+00	0.1		0.1	
149+00 - 175+00		0		0
175+00 - 187+00	0.2	–	0.2	–
TOTAL	5.3 ACRE	6 STA.	4.1 ACRE	6 STA.

SODDING

STATION-STATION	NO.	SIZE	SQ. YD.
19+00 - 28+00 LT. & RT.	22	6' X 15'	220
31+50 - 37+50 LT. & RT.	22	6' X 15'	220
59+50 - 63+50 LT. & RT.	28	6' X 15'	280
94+00 - 105+00 LT. & RT.	30	6' X 15'	300
132+00 - 142+00 LT. & RT.	34	6' X 15'	340
TOTAL			1,360

STEEL PLATE BEAM GUARD

STATION-STATION	LOCATION	LIN. FT.	ANCHORAGES
29+24 - 30+27	RT.	103	1
29+51 - 30+54	LT.	103	1
30+96 - 31+99	RT.	103	1
31+25 - 32+28	LT.	103	1
84+70 - 86+75	RT.	205	2
84+70 - 86+75	LT.	205	2
TOTAL		822	8

EXCAVATION

STATION-STATION	UNCL.	MARSH	BORROW
18+80 - 45+61	17,712	7,182	
45+61 - 53+52	2,874	1	
53+52 - 85+88	28,885	8,194	
85+88 - 103+00	8,044	29	1,120
103+00 - 118+62	9,672	1,557	
118+62 - 141+75	9,367	30	
141+75 - 181+38	16,531		
181+38 - 187+00	504		2,735
SUBTOTAL	93,589	16,993	3,855
CHANNEL CHANGE STA. 85+75	300		
TOTAL	93,889	16,993	3,855

HEAVY RIPRAP

STATION-STATION	CU. YD.
28+50 - 30+00 RT.	400
31+50 - 32+50 LT.	200
TOTAL	600

B P R DIVISION	PROJE
	S 112

STA. 18+80 - STA. 40+00
13 R/W POSTS REQ'D.

STA 31+25 - STA. 32+28 LT.
103 LIN. FT. STEEL PLATE BEAM GUARD REQ'D.

STA. 31+50 - 32+50 LT.
200 CU. YDS. HEAVY RIPRAP REQ'D.

STA. 18+68 C.T.H. "YY"
TYPE B INTERSECTION REQ'D.

S 89° 03' E

S. T. H. 86

66'

STA. 29+00 P.E. LT. CONSTRUCT
1-18" X 26' C.P. CLASS III REQ'D.

STA. 29+51 - STA. 30+54 LT.
103 LIN. FT. STEEL PLATE BEAM GUARD REQ'D.

STA. 29+87 LT.
1-18" X 24' C.P. REMOVE

STA. 35+53 P.E. LT. RESTORE
1-18" X 26' C.P. CLASS III REQ'D.

SPIRIT RIVER

N. 0° 09' W.

88° 54'

80° 27'

15 20 25 30 35

70' 50' 65' 70'

EXISTING C.T.H. "YY"

ST. GAS PUMP

STANS

21+05 33 21+02 90

STA. 24+50 P.E. RT. CONSTRUCT
1-18" X 26' C.P. CLASS III REQ'D.

STA. 19+37 P.E. RT. RESTORE

66'

BEGIN PROJECT S 112913
STA. 18+80

STA. 29+24 - STA. 30+27 RT.
103 LIN. FT. STEEL PLATE BEAM GUARD REQ'D

STA. 30+46.5 - STA. 31+09.5
BRIDGE NO. B-35-50-5-54
TO REMAIN 63.54' SPAN, 24' ROADWAY, I BEAM

STA. 28+50 - 30+00 RT.
400 CU. YDS. HEAVY RIPRAP REQ'D.

STA. 30+96 - STA 31+99 RT.
103 LIN. FT. STEEL PLATE BEAM GUARD REQ'D.

STA. 33+00 P.E. RT. RESTORE
1-18" X 30' C.P. REMOVE
1-18" X 26' C.P. CLASS III REQ'D.

27+00 50' | 26+00 65' | 31+94 65' | 33+00 80' | 35+00 90' | 38+00 60' | 39+50 150'

BENCH MARKS

NO.	STA.	DESCRIPTION
19	19+20	4" X 4" CONCRETE POST, IRON CAP
16	27+05	SPIKE IN 16 ELM
17	34+55	SPIKE IN 12 POPLAR

NET CENTERLINE LEN. [illegible]

DEDUCTION FROM NET CENTERLINE LENGTH [illegible] FOR BRIDGE NO. B-35-50-5-54

CL.	17,712 C.U. YD.
FILL	13,372 C.U. YD.
SHR.	[illegible]
MARS.	7,[illegible] C.U. YD.

+80

1560 1550 1540

18+80 1553.60 | 19+00 1553.53 | 21+00 1552.80 | 28+00 1548.63 | 26+00 1542.37 | 28+00 1538.20 | 30+00 1540.20 | 31+25 1541.45 | 32+50 1542.70 | 33+75 1546.40 | 34+00 1547.13 | 37+00 1556.00

-0.36% | 400' V.C. | -2.09% | 400' V.C. | +1.00% | 250' V.C. | +2.98% | 600' V.C. | +0.26%

FINISHED ℄ PROFILE

EXISTING ℄ PROFILE

MARSH SOUNDINGS

STA. 38+00 - 45+62
MARSH EXCAVATION 7183 CU. YDS.

18 9 20 1 2 3 4 25 6 7 8 9 30 1 2 3 4 35 6 7 8 9

53.5 52.9 51.9 50.5 48.6 46.5 44.5 42.4 40.7 39.7 39.6 40.2 41.1 42.4 44.4 47.1 49.9 52.1 54.0 55.4 56.3

PLATE 1—PLAN—PROFILE

PLAN & PROFILE STA

B P R DIVISION	PROJECT
	S 1129(3)

9434-2-70

STA. 40+00 - STA. 70+00
10 R/W POSTS REQ'D.

STA. 46+30 P.E. LT. CONSTRUCT
1-18" X 26' C.P. CLASS III REQ'D.

STA. 50+24 P.E. RT. RESTORE
1-18" X 26' C.P. CLASS III REQ'D.

STA. 56+06 P.E. RT. RESTORE

STA. 60+39 P.E. RT. RESTORE
1-18" X 26' C.P. CLASS III REQ'D.

STA. 40+00
MATCH LINE
L.H.E. (MARSH)
150' 70' 60' 45+37 45+18 N. 0 09' W. N. 0 17' W. EXISTING C.L. 60+00 61+50.3 65+00 P.I. 61+50.3 0 08' LT.

BENCH MARKS

NO.	STA.	DESCRIPTION	
16	46+50	SPIKE IN 8" POPLAR	50' LT.
15	54+90	SPIKE IN 10" POPLAR	60' LT.
14	65+95	SPIKE IN 10" POPLAR	65' LT.

NET CENTERLINE LENGTH STA. 40+00 - STA. [illegible] = [illegible] L.F.

UNCL. 2,874 CU. YD.
FILL 2,142 CU. YD.
SHG. 34 %
MARSH 1 CU. YD.

+61 +92

FINISHED ℄ PROFILE
EXISTING ℄ PROFILE
MARSH SOUNDINGS
+0.26%
-2.28%
1200' V.C.
40+00 1556.78
54+00 1560.43
60+00 1562.00
66+00 1548.29
1560 1550 1540 1530

STA. 41+50
1-24" X 54' C.P. CLASS III REQ'D.

STA. 42+53
1-15" X 32' C.P. REMOVE

STA. 57+29
1-18" X 28' C.P. REMOVE
1-24" X 44' C.P. CLASS III REQ'D.

53.1 56.8 53.0 57.0 52.9 57.3 52.6 57.6 53.3 57.8 53.5 58.1 53.5 58.4 54.0 58.6 54.8 58.9 56.2 59.1 58.1 59.4 58.2 59.7 58.8 59.9 59.7 60.2 60.4 60.4 61.2 60.6 61.5 60.5 58.3 60.5 57.6 59.8 56.0 59.1 55.3 58.2 [illegible] 57.1 [illegible] 55.7 54.3 54.2 [illegible] 52.4 [illegible] 50.5 [illegible] 48.3 [illegible] 46.0 [illegible] 43.7 [illegible] 41.4 [illegible]

40 1 2 3 4 45 6 7 8 9 50 1 2 3 4 55 6 7 8 9 60 1 2 3 4 5 6 7 8 9 70

PLATE 1 PLAN-PROFILE

B.P.R. DIVISION	PROJ
	S 112

9434-

STA. 74+82 P.E. LT. RESTORE
1-24' X 26' C.P. CLASS III REQ'D.

STA. 70+00 - STA. 100+00
IT RAY POSTS REQ'D.

N

STA. 100+00 P.E. LT. RESTORE
1-15" X 16' C.P. REMOVE
1-18" X 26' C.P. CLASS III REQ'D.

STA. 84+70 - STA 86+75 LT.
205 LIN FT STEEL PLATE BEAM GUARD REQ'D.

RICHIE CREEK

STA. 70
MATCH LINE

60' 60' 76+00 60' 78+00 85' 85' 85' 80 85 EXISTING C.L. 90 95 60' 60' 60' 98+00 60'

STA. 84+70 - STA. 86+75 RT.
205 LIN. FT STEEL PLATE BEAM GUARD REQ'D

76+00 60' 77+00 80' 78+00 60'

25'

CHANNEL CHANGE DETAIL

STA 85+75
300 CU YDS WASTE

BENCH MARKS

NO.	STA.	DESCRIPTION
18	[illegible]	SPIKE IN 10" POPLAR
12	[illegible]	SPIKE IN 7" POPLAR
[illegible]	[illegible]	SPIKE IN 8" BALSAM

NET CENTERLINE LENGTH STA. 70+00 - STA. 100+00 3,000.00 LIN. FT.

UNCL. 28,885 CU. YD
FILL 22,802 CU. YD
SHG. 27 %
MARSH 8,194 CU. YD

UNCL. 5,044 CU. YDS.
FILL 5,935 CU. YDS.
SHG. 30
MARSH [illegible] CU. YDS.
BORROW 1,120 CU. YDS

+88

1550
1540
1530
1520

FINISHED ℄ PROFILE

71+00 1536.86 -2.28% 600' V.C. 74+00 1530.00 77+00 1517.86 -0.71% 79+00 1526.49 400' V.C. 81+00 1525.00 83+00 1525.00 0.00% 88+00 1525.00 600' V.C. 91+00 1525.00 94+00 1533.74 +2.91% 97+50 1543.94

STA. 86+32
1-24' SLAB SPAN BRIDGE REMOVE
STA. 85+75
1-5' X 10' X 72' TWIN BOX BRIDGE REQ'D.
STRUCTURE NO. B-35-50-23 (SEE X 38886 & X38887)
SKEW 30° L.H.F

STREAM BED ELEV. 1516.2

EXISTING ℄ PROFILE

STA. 74+68
1-18" X 28" X 32' C.P. ARCH REMOVE
1-24" X 54' C.P. CLASS III REQ'D.

MARSH SOUNDINGS

STA. 80+50 - 86+50
MARSH EXCAVATION 8223 CU. YD

33.6 39.1 31.8 36.9 29.6 34.7 27.6 32.8 26.8 31.2 26.9 29.8 29.8 28.7 25.7 27.9 27.2 27.1 29.5 26.4 22.0 25.8 18.6 25.4 18.4 25.1 18.2 25.0 18.3 25.0 18.6 25.0 18.1 25.0 18.9 25.0 15.9 25.0 22.5 25.2 21.9 26.0 21.4 27.2 23.6 28.9 27.0 31.1 29.2 33.7 35.9 36.6 35.8 39.6 46.7 42.5 45.0 45.4 46.5 41.9

70 1 2 3 4 75 6 7 8 9 80 1 2 3 4 5 6 7 8 9 90 1 2 3 4 5 6 7 8 9

PLATE 1 PLAN PROFILE

PLAN & PROFILE STA. 70+0

B.P.R. DIVISION	PROJECT	SHEET NUMBER
	S 112903	7

9434-2-70

STA. 100+00 - STA. 130+00
7 R/W POSTS REQ'D.

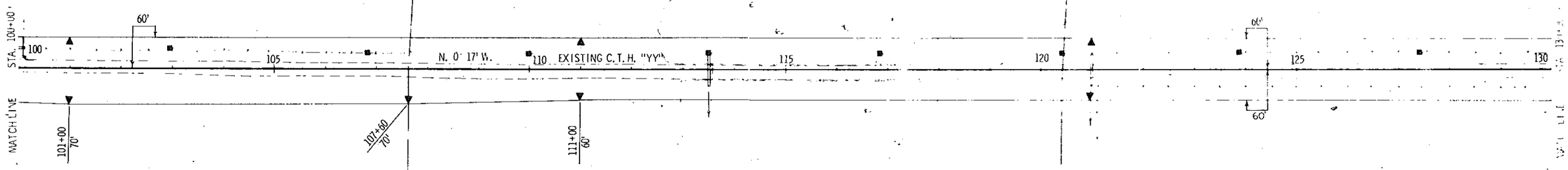

NET CENTERLINE LENGTH STA. 100+00 - STA. 130+00 3 [illegible] LF., [illegible]

BENCH MARKS

NO.	STA.	DESCRIPTION		ELEV.
10	102+25	SPIKE IN 8" WHITE BIRCH	60' RT.	1559.
9	112+00	SPIKE IN 8" POPLAR	65' LT.	1543.
8	124+75	SPIKE IN 9" POPLAR	65' RT.	1547.

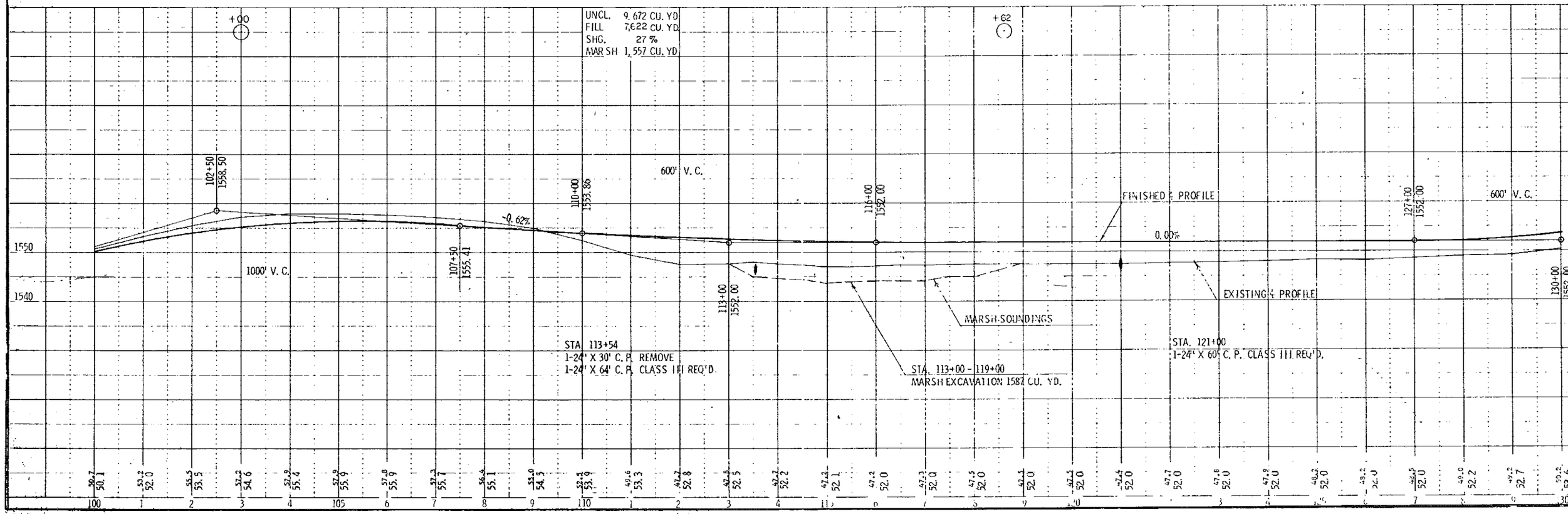

PLATE 1 - PLAN - PROFILE

PLAN & PROFILE STA. 100+00

B.P.R. DIVISION	PROJE
	S 112

9434-2

STA. 130+00 - STA. 160+00
14 R/W POSTS REQ'D.

STA. 132+80 P.E. LT. CONSTRUCT
1-24' X 26' C.P. CLASS III REQ'D.

STA. 140+50 P.E. LT. CONSTRUCT
1-18' X 26' C.P. CLASS III REQ'D.

STA. 152+00 P.E. LT. CONSTRUCT
1-18' X 26' C.P. CLASS III REQ'D.

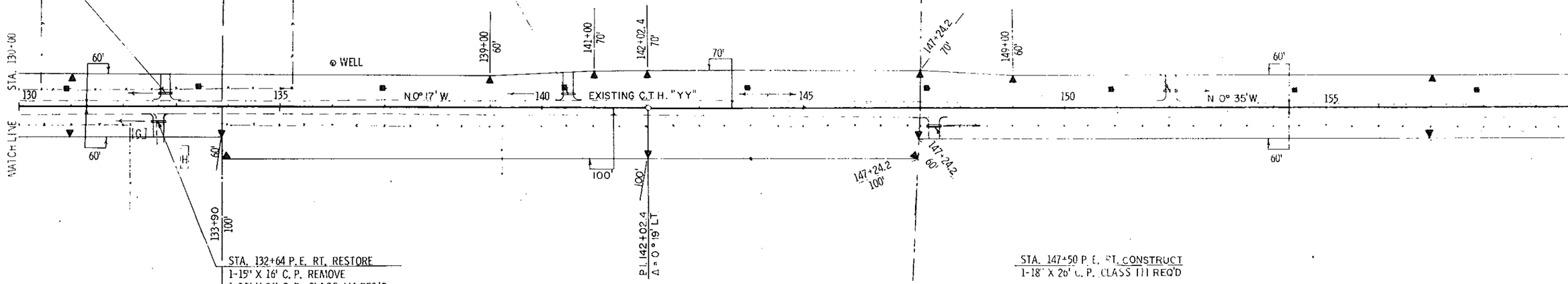

STA. 132+64 P.E. RT. RESTORE
1-15' X 16' C.P. REMOVE
1-24' X 26' C.P. CLASS III REQ'D.

STA. 147+50 P.E. RT. CONSTRUCT
1-18' X 26' C.P. CLASS III REQ'D

BENCH MARKS

		DESCRIPTION
		SPIKE IN DOUBLE ELM
		SPIKE IN POPLAR
		SPIKE IN POPLAR

NET CENTERLINE LENGTH STA. 13[illegible] - STA. 16[illegible] [illegible] LIN. FT.

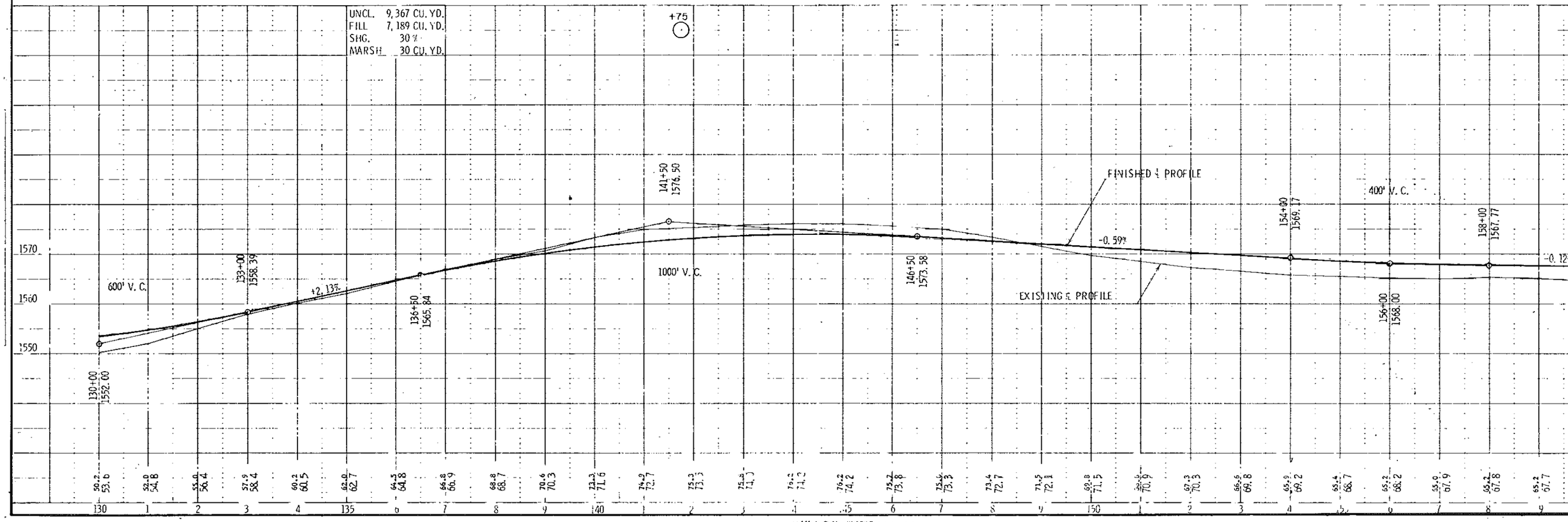

PLAN & PROFILE STA

B P R DIVISION	PROJECT
.	S 112903

9434-2-70

STA. 160+00 - STA. 187+00
9 RAW POSTS REQ'D.

STA. 173+66 TOWN ROAD LT. RESTORE
TYPE B INTERSECTION REQ'D.
1-18" X 20' C. P. REMOVE
1-18" X 46' C. P CLASS III REQ'D.

STA. 171+10 P.E. RT. RESTORE
1-18"X 26'C.P. CLASS III REQ'D.

STA. 173+66 TOWN ROAD RT.
RESTORE TYPE B INTERSECTION REQ'D.
1-18" X 26' C. P. REMOVE
1-18" x 46' C. P. CLASS III REQ'D.

STA. 183+75 P.E RT. RESTORE
1-18" X 26' C P. CLASS III REQ'D.

END OF PROJECT S 112903
STA. 187+00 - STA. 187+00 = BEGINNING OF
PROJ. S 112902

BENCH MARKS

NO.	STA.	DESCRIPTION	
5	159+90	SPIKE IN 10" POPLAR	90' LT.
4	169+85	SPIKE IN 10" POPLAR	105' LT.
3	175+75	SPIKE IN 8" POPLAR	[illegible]
2	185+30	SPIKE IN 24" YELLOW [illegible]	40' LT.

NET CENTERLINE LENGTH STA. 187+00 - 273+00 LIN. FT.

UNCL.	16,531 CU. YD
FILL	12,761 CU. YD
SHG.	30 %

EXCL.	504 CU. YD.
FILL	2,105 CU. YD.
SHG.	42
OVERHAUL	2735 STA. YD.

FINISHED ℄ PROFILE
EXISTING ℄ PROFILE
PROFILE TOWN ROAD LT. & RT. ℄ STA. 173+66 = 10+00

STA. 164+55
1-12" X 18" X 32' C. M. P. A. REMOVE
1-24" X 62' C. P. CLASS III REQ'D.

STA. 180+86
1-8 FT. SPAN STRUCTURAL PLATE PIPE ARCH IN PLACE
EXTEND 28' LT. & 26' RT. 10 GAGE ENDS SQUARE CUT

PLATE I PLAN PROFILE

PLAN - PROFILE STA. 160