FORM E-B-12-62

B.P.R. DIVISION	PROJECT	SHEET NO.	TOTAL SHEETS
4	S1182(2)	9	13

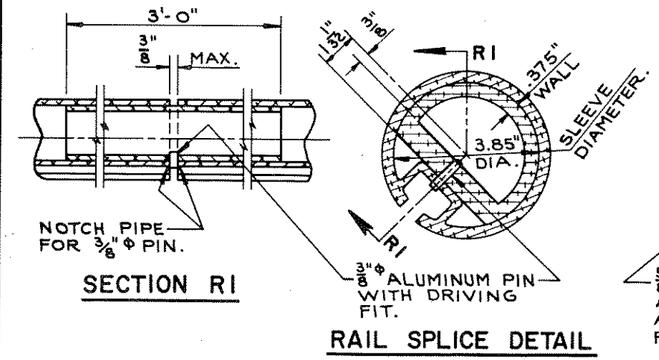

RAIL SPLICE DETAIL

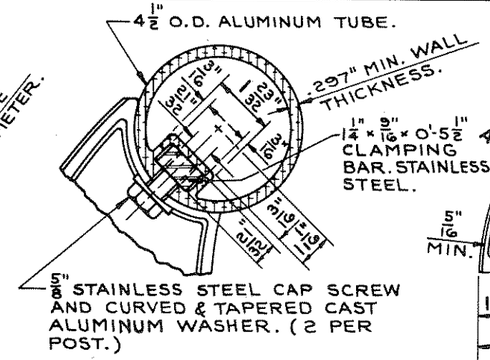

DETAIL OF RAIL ATTACHMENT TO POST

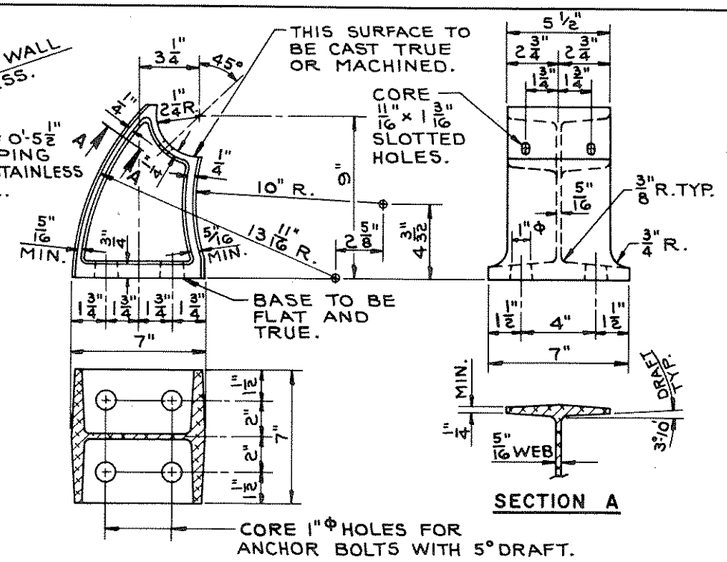

ALUMINUM POST CASTING

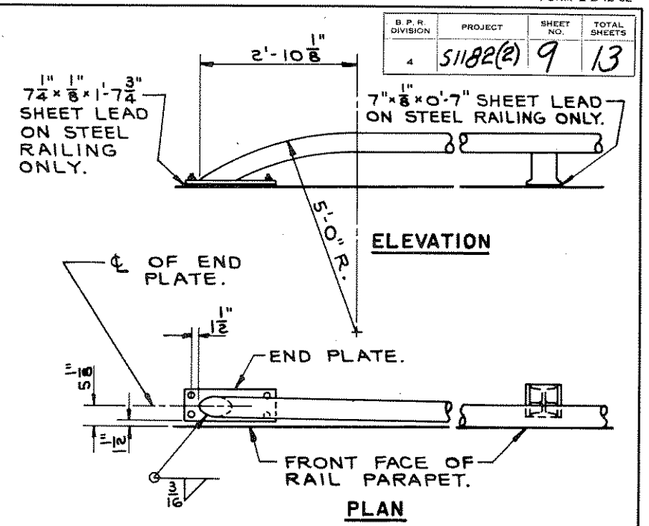

DETAIL OF RAIL BEND AT ABUTMENTS

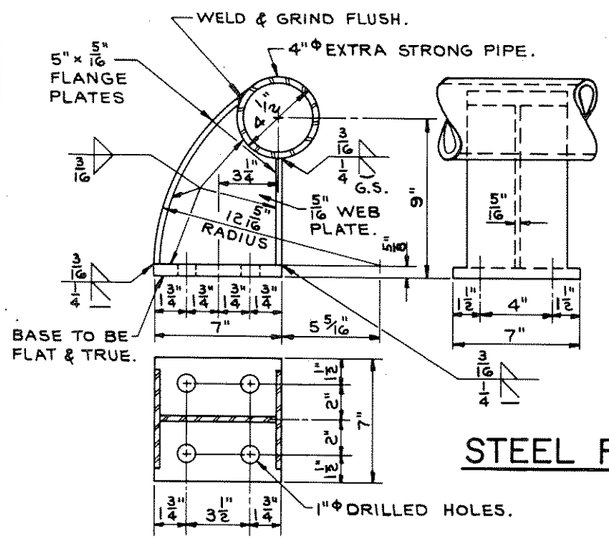

STEEL POST DETAILS

NOTES

RAILING SPLICES SHALL BE LOCATED SUCH THAT ℄ OF SPLICE IS 1/6 PANEL LENGTH ±4" OFF NEAREST POST.

ALUMINUM SHIMS SHALL BE USED UNDER POSTS AND END PLATES WHERE REQUIRED FOR ALIGNMENT.

RAILING SHALL BE FABRICATED IN TWO AND THREE PANEL LENGTHS.

ANCHOR BOLTS, NUTS & WASHERS TO BE STAINLESS STEEL.

WALL THICKNESS OF TUBING SHOWN ABOVE SHALL BE MINIMUM NOMINAL AVERAGE WALL THICKNESS.

STEEL RAILING DETAILS

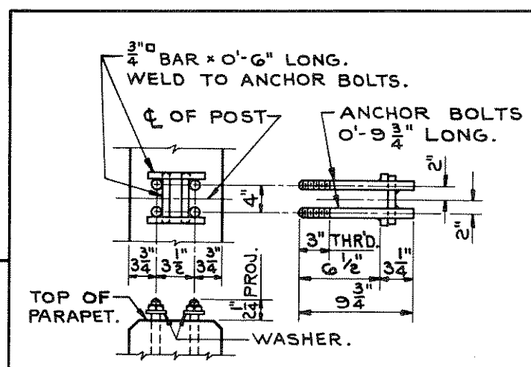

AT POSTS

END PLATE SHIM DETAILS

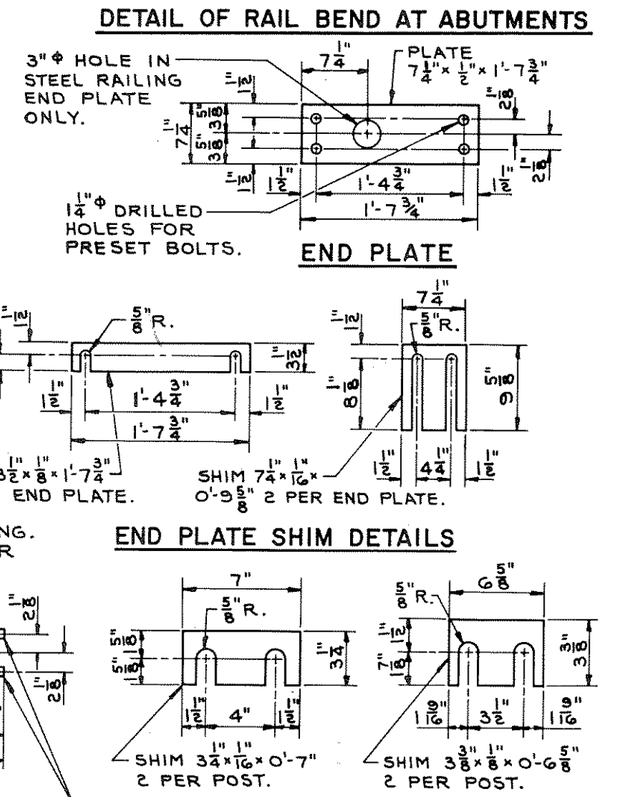

POST SHIM DETAILS

WORK THIS SHEET WITH SHEET TITLED "RAIL PARAPET DETAILS"

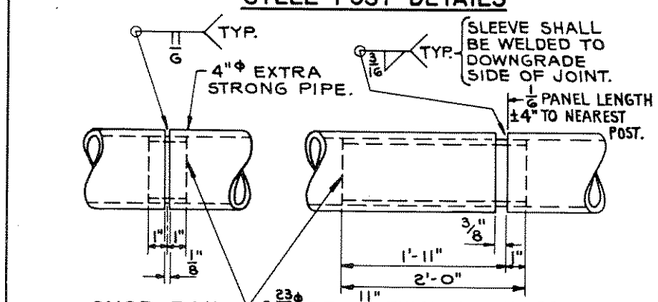

SHOP RAIL SPLICE DETAIL

THE LOCATION OF THE SHOP SPLICE SHALL BE SHOWN ON THE SHOP DRAWINGS.

FIELD ERECTION JOINT DETAIL

NOTES

RAILING SHALL BE FABRICATED IN 2 & 3 PANEL LENGTHS.

STEEL SHIMS SHALL BE USED UNDER POSTS AND UNDER END PLATES WHERE REQUIRED FOR ALIGNMENT.

THE FOLLOWING MATERIALS SHALL BE USED:

RAILING SHALL BE 4" Φ EXTRA STRONG PIPE CONFORMING TO ASTM DESIGNATION A53, GRADE B.

SLEEVES SHALL BE 3 23/32" Φ O.D. × 11/32" THICK SEAMLESS MECHANICAL TUBING MADE OF STEEL WITH A MINIMUM ULTIMATE TENSILE STRENGTH OF 60,000 P.S.I. AND A MINIMUM ELONGATION OF 10%.

POSTS SHALL BE FABRICATED FROM MATERIAL CONFORMING TO ASTM DESIGNATION A36.

ANCHOR BOLTS TO BE MADE FROM MATERIAL CONFORMING TO ASTM A307.

CAULK EXPOSED OPENINGS BETWEEN SHIMS WITH LEAD WOOL.

GALVANIZE ENTIRE RAILING AFTER FABRICATION INCLUDING NUTS, WASHERS, SHIMS AND TOP 3 1/2" OF ANCHOR BOLTS.

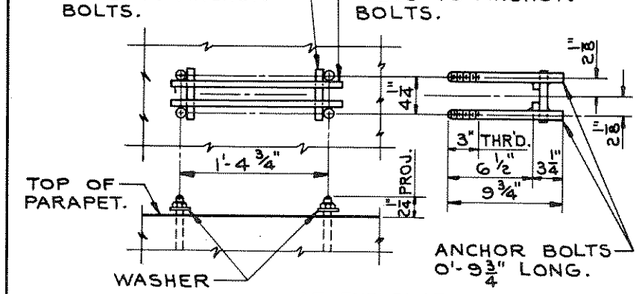

AT END PLATE

ANCHOR BOLT SETTING DETAILS

THE SHANK AND ROOT OF THREAD DIAMETER FOR ANCHOR BOLTS SHALL BE A MINIMUM OF 0.62 INCHES.

REVISED	STATE HIGHWAY COMMISSION OF WISCONSIN
	DETAILS FOR TYPE "G" TUBULAR ALUMINUM & STEEL RAILING
DESIGN SPEC. A.A.S.H.O. '61	LOADING —	CONST. SPEC. 1963
DATE 1-12-67	DESIGN —	DRAWN PAGE	CKD F.R.W.
STRUCTURE B-35-18	SHEET 5 OF 9

X36679