FORM E-B-12-62

B.P.R. DIVISION	PROJECT	SHEET NO.	TOTAL SHEETS
4	51182(2)	10	13

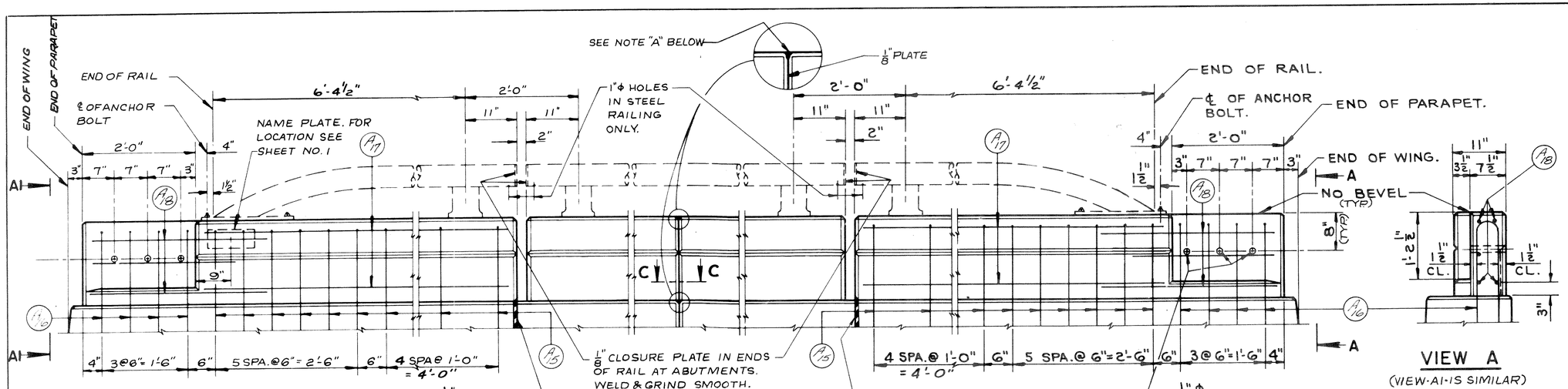

AT SOUTH ABUTMENT

AT PIER

AT NORTH ABUTMENT

ELEVATION OF RAIL PARAPET

VIEW A

(VIEW A-1 IS SIMILAR)

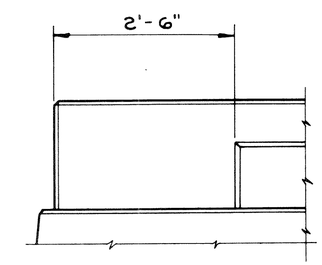

VIEW SHOWING OUTSIDE FACE OF RAIL PARAPET

TYPICAL ALL WINGS

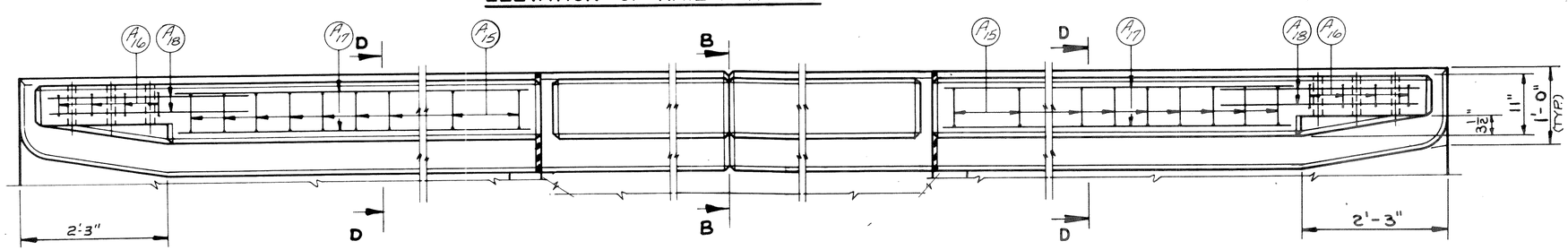

PLAN OF RAIL PARAPET

NOTES

WHEN PARAPETS AND CURBS ARE POURED CONTINUOUSLY FROM END TO END THEY SHALL BE SEPARATED AT THE DEFLECTION JOINTS BY A PIECE OF 1/8" ZINC OR ALUMINUM PLATE CUT AS SHOWN IN SECTION "B" BY SHADED AREA. IF CONSTRUCTION JOINTS IN PARAPETS AND CURBS ARE USED AT THE DEFLECTION JOINTS ONE SIDE OF JOINT SHALL BE COATED WITH BITUMINOUS PAINT AND PLATE SEPARATORS MAY BE OMITTED.

COST OF 1 1/4" Φ GALVANIZED PIPE SLEEVES AND 3/4" Φ BAR TO BE INCLUDED IN UNIT PRICE BID FOR CONCRETE MASONRY.

WORK THIS SHEET WITH SHEET TITLED "DETAILS FOR TYPE "G" TUBULAR ALUMINUM AND STEEL RAILING".

ALL POST SPACINGS ARE TAKEN HORIZONTALLY ALONG ℄ OF RAILING AT BASE OF POSTS. ALL POSTS SHALL BE SET NORMAL TO GRADE.

NOTE "A": FILL WITH NON-STAINING GRAY TWO COMPONENT POLYSULFIDE LIQUID POLYMER (GUN GRADE) WITH SURFACE PRIMER, CONFORMING TO A.S.A.-A-116.1-1960.

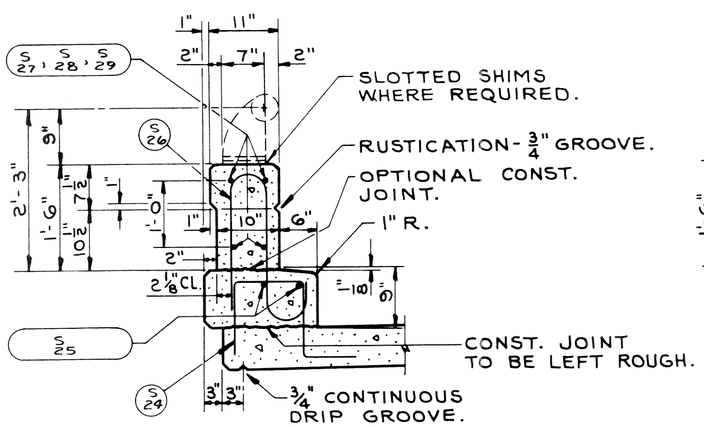

SECTION THRU PARAPET & CURB ON BRIDGE

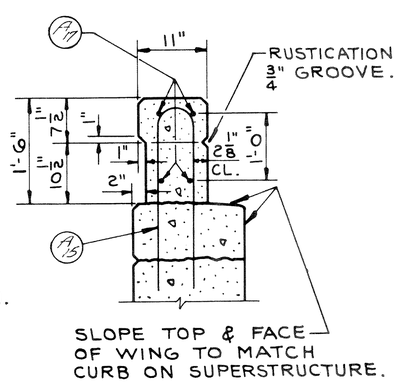

SECTION D

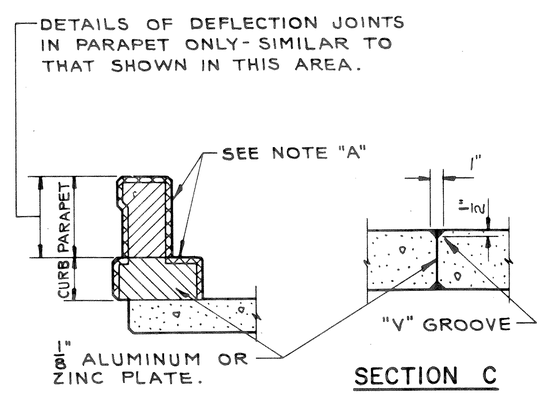

SECTION B

SHOWING DEFLECTION JOINT IN CURB AND PARAPET AT PIERS.

SECTION C

REVISED	STATE HIGHWAY COMMISSION OF WISCONSIN
	RAIL PARAPET DETAILS
	DESIGN SPEC AASHO '61 · LOADING — · CONST SPEC 1963
	DATE 1-12-67 · DESIGN — · DRAWN PAGE · CKD F.R.W.
STRUCTURE B-35-18	SHEET 6 OF 9

X36680