STATE PROJECT NUMBER	SHEET NO.

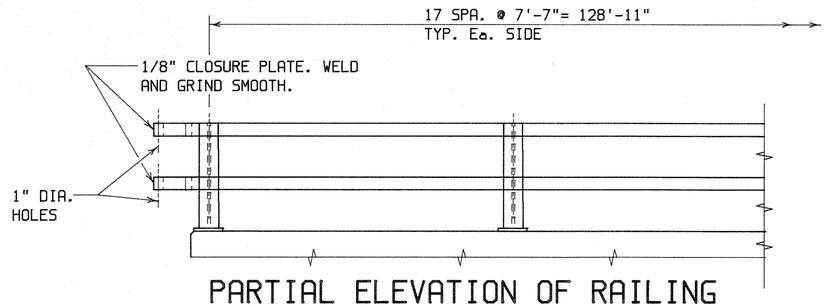

PARTIAL ELEVATION OF RAILING

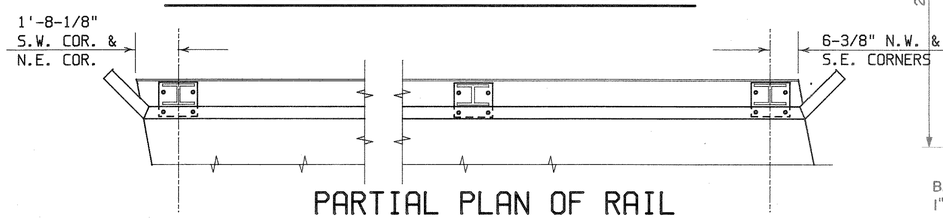

PARTIAL PLAN OF RAIL

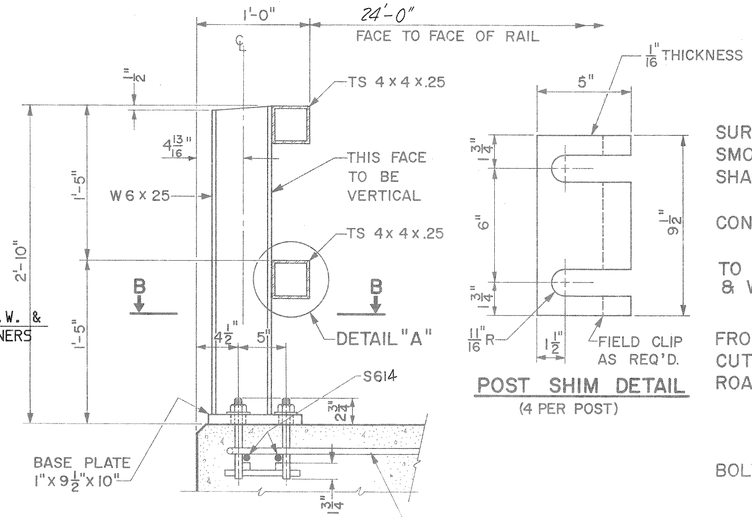

SECTION A

POST SHIM DETAIL
(4 PER POST)

GENERAL NOTES

1. BID ITEM SHALL BE 'TUBULAR RAILING, TYPE F.'
2. POST BASE PLATES SHALL BE FLAT WITH ALL SURFACES SMOOTH AND FREE FROM WARP AND ALL EDGES SMOOTH, STRAIGHT AND VERTICAL. ALL PLATE CUTS SHALL SHALL BE MACHINE OR MACHINE FLAME CUTS.
3. RAILING SHALL BE 4 x 4 x .25 STRUCTURAL TUBING CONFORMING TO A.S.T.M. DESIGNATION A36.
4. ANCHOR BOLTS SHALL BE 7/8" ø NOMINAL CONFORMING TO A.S.T.M. A449 WITH 3" THREAD AND HIGH STRENGTH NUTS & WASHERS.
5. POSTS, BASE PLATES AND SHIMS SHALL BE MADE FROM MATERIAL CONFORMING TO A.S.T.M. DESIGNATION A 36. CUT BOTTOM OF POST TO MATCH CROSS SLOPE OF ROADWAY. PLACE POST NORMAL TO GRADE LINE.
6. PLACE ANCHOR BOLTS NORMAL TO BASE PLATE.
7. ALL MEMBERS, INCLUDING UPPER 4" OF ANCHOR BOLTS, SHALL BE GALVANIZED AFTER FABRICATION.
8. RAILING SHALL BE FABRICATED IN 2 OR 3 PANEL LENGTHS.
9. BEAM GUARD ATTACHMENT MAY BE WELDED TO RAILS AND RAILS MAY BE WELDED TO POSTS.
10. FILL POST ANCHOR BOLT HOLES WITH NON-STAINING GRAY NON-BITUMINOUS JOINT SEALER.
11. CALK EXPOSED OPENINGS BETWEEN SHIMS.
12. STEEL SHIMS SHALL BE USED UNDER POSTS WHERE REQUIRED FOR ALIGNMENT.
13. PRIOR TO GALVANIZING ALL STEEL RAILING SHALL BE GIVEN A NO. 6 COMMERCIAL BLAST CLEANING BY S.S.P.C. SPECIFICATIONS.

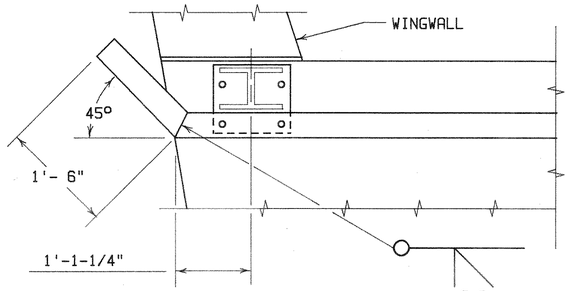

END POST DETAIL

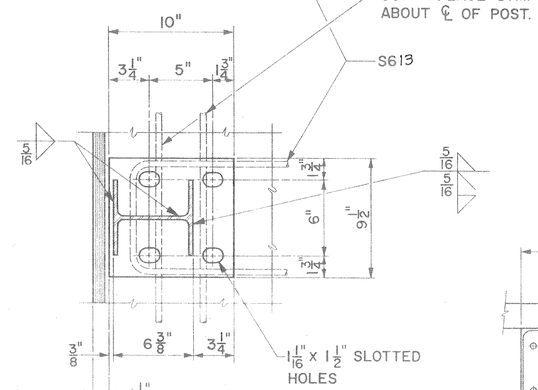

SECTION B

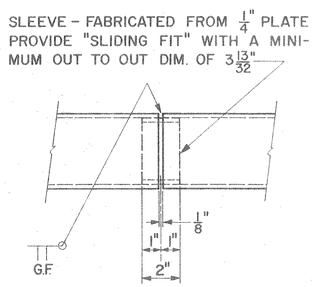

SHOP RAIL SPLICE DETAIL
LOCATION MUST BE SHOWN ON THE SHOP DRAWINGS

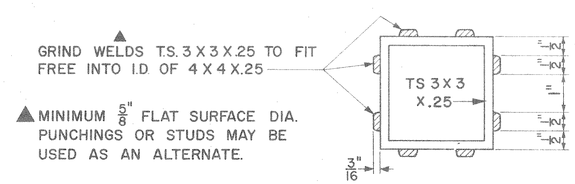

SECTION THRU SLEEVE

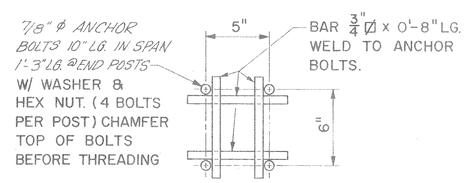

ANCHOR BOLT DETAILS

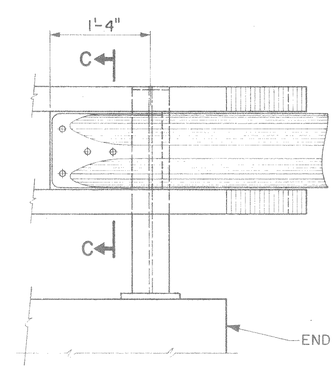

DETAIL AT END POST
(BEAM GUARD RAIL ATTACHMENT)

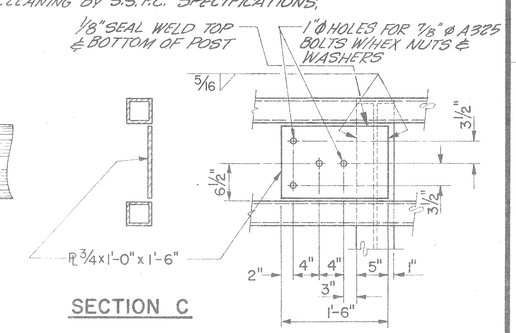

SECTION C

NOTE: BEAM GUARD RAIL ATTACHMENT TO BE INCLUDED IN BID ITEM FOR RAILINGS.

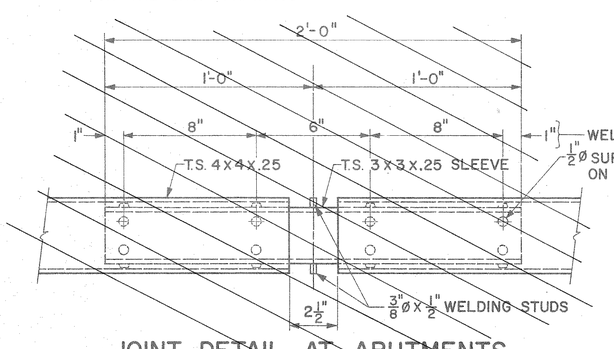

JOINT DETAIL AT ABUTMENTS

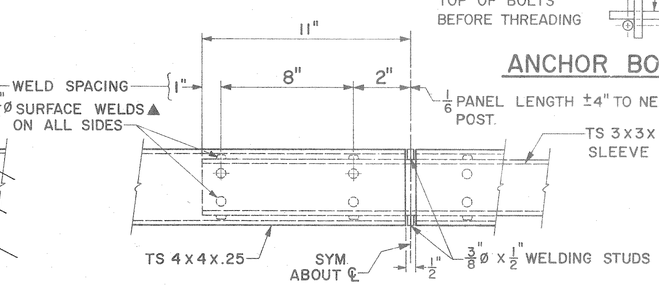

FIELD ERECTION JOINT DETAIL

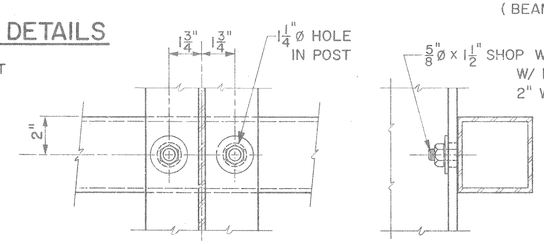

DETAIL "A"

No.	Date	Revision	By

STATE OF WISCONSIN
DEPARTMENT OF TRANSPORTATION
DIVISION OF HIGHWAYS

STRUCTURE B-35-91

Const. Spec. W.I.S. '81	Drawn By T.L.	Plans Checked L.M.B.

TUBULAR RAILING TYPE "F"

SHEET 6 OF 6

X 77184

754 BR