FORM E-B-12-62

B.P.R. DIVISION	PROJECT	SHEET NO.	TOTAL SHEETS
4	500503(4)	18	33

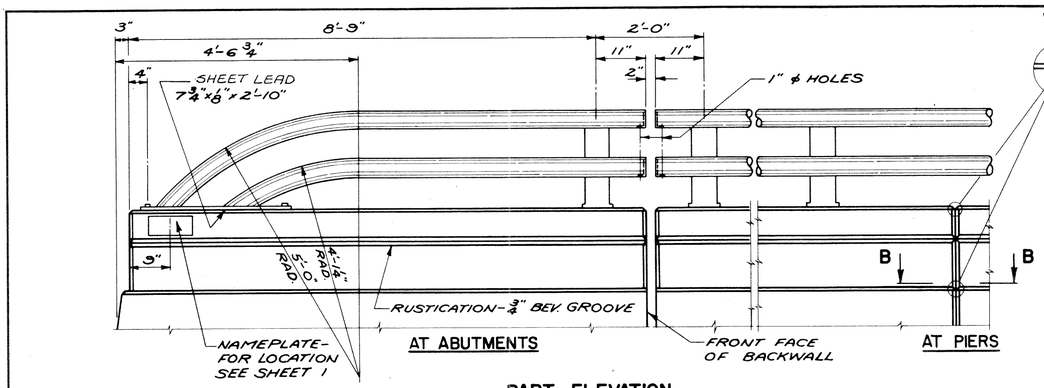

PART ELEVATION

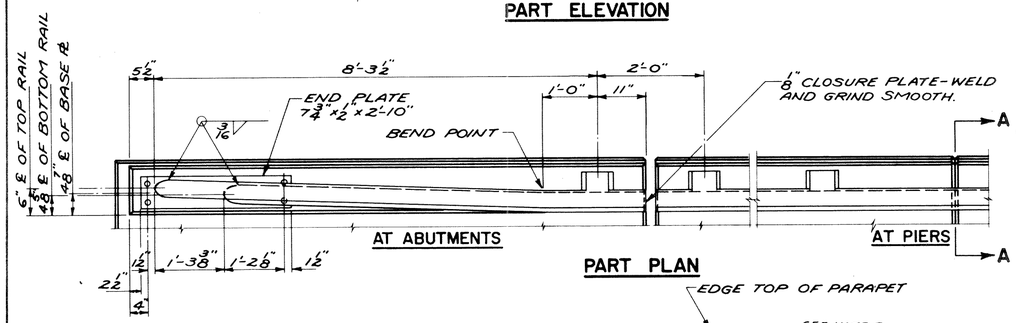

PART PLAN

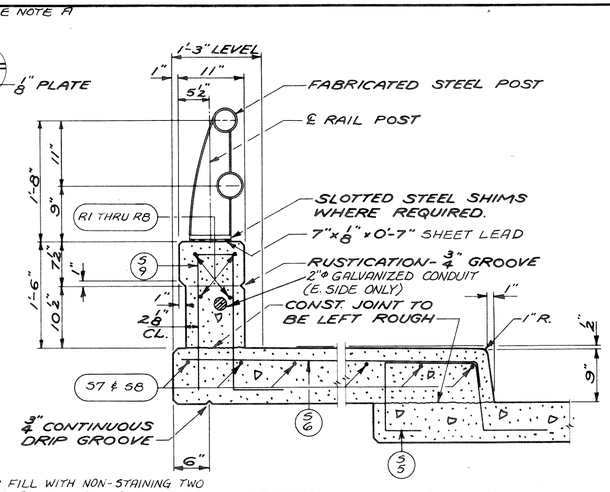

NOTE A: FILL WITH NON-STAINING TWO COMPONENT POLYSULFIDE LIQUID POLYMER (GUN GRADE), WITH SURFACE PRIMER MEETING APPROVAL OF THE ENGINEER.

SECTION THRU SIDEWALK

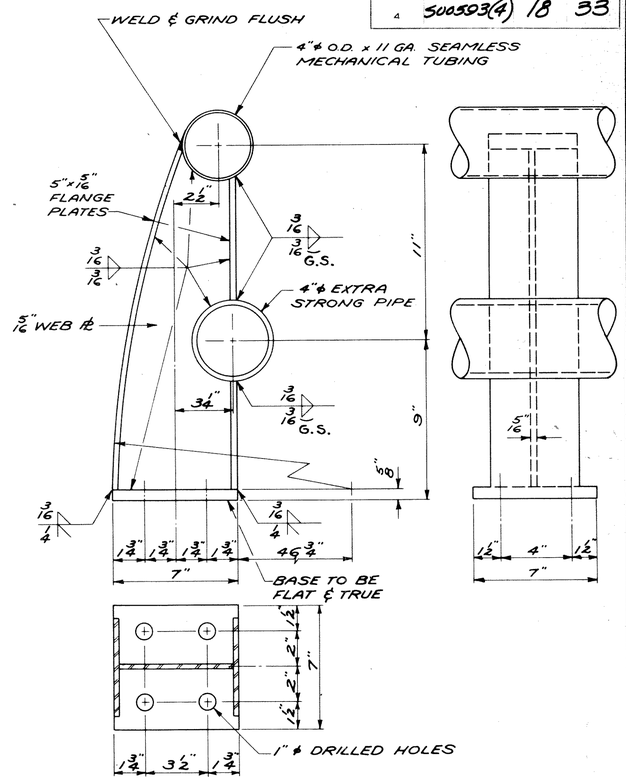

POST DETAILS

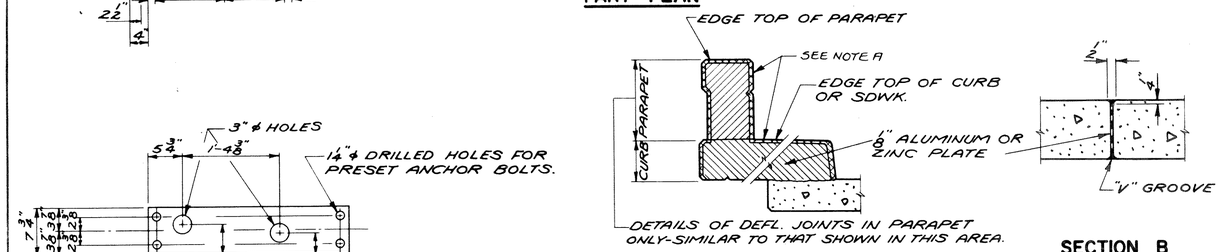

SECTION A

SECTION B

END PLATE

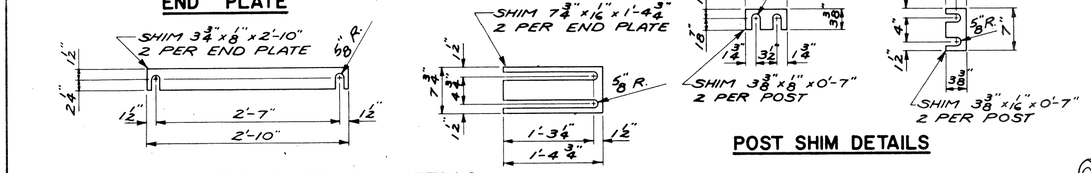

END PLATE SHIM DETAILS

POST SHIM DETAILS

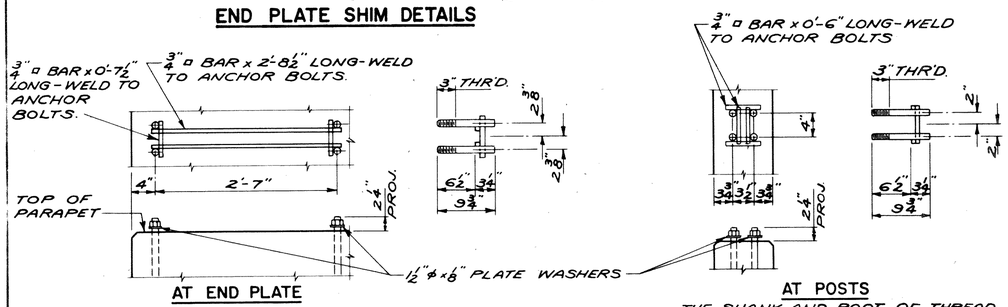

THE SHANK AND ROOT OF THREAD DIAMETER FOR ANCHOR BOLTS SHALL BE A MINIMUM OF 0.62 INCHES.

ANCHOR BOLT SETTING DETAILS

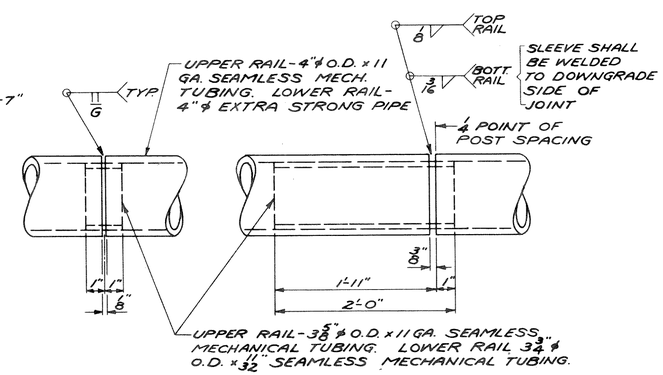

SHOP RAIL SPLICE DETAIL

THE LOCATION OF THE SHOP SPLICE SHALL BE SHOWN ON THE SHOP DRAWINGS.

FIELD ERECTION JOINT DETAIL

NOTES

1. STEEL RAIL POSTS SHALL BE SET NORMAL TO GRADE.
2. RAILING SHALL BE FABRICATED IN 2 & 3 PANEL LENGTHS.
3. STEEL SHIMS SHALL BE USED UNDER POSTS AND UNDER END PLATES WHERE REQUIRED FOR ALIGNMENT.
4. WHEN PARAPETS AND CURBS ARE POURED CONTINUOUSLY FROM END TO END THEY SHALL BE SEPARATED AT THE DEFLECTION JOINTS BY A PIECE OF ⅛" ZINC OR ALUMINUM PLATE CUT AS SHOWN IN SECTION "A" BY SHADED AREA. IF CONST. JOINTS IN PARAPETS AND CURBS ARE USED AT THE DEFLECTION JOINTS, ONE SIDE OF JOINT SHALL BE COATED WITH BITUMINOUS PAINT AND PLATE SEPARATORS MAY BE OMITTED.
5. THE FOLLOWING MATERIALS SHALL BE USED:
   UPPER RAIL SHALL BE 4"ϕ O.D. x 11 GA. SEAMLESS MECHANICAL TUBING MADE OF STEEL WITH A MINIMUM ULTIMATE TENSILE STRENGTH OF 60,000 P.S.I. AND A MINIMUM ELONGATION OF 10%.
   LOWER RAIL SHALL BE 4"ϕ EXTRA STRONG PIPE CONFORMING TO ASTM DESIGNATION A53, GRADE B.
   SLEEVES FOR UPPER RAIL SHALL BE 3⅝"ϕ O.D. x 11 GA. SEAMLESS MECHANICAL TUBING. SLEEVES FOR LOWER RAIL SHALL BE 3¾"ϕ O.D. x 11/32" SEAMLESS MECHANICAL TUBING. BOTH SLEEVES SHALL BE MADE OF STEEL WITH A MINIMUM ULTIMATE TENSILE STRENGTH OF 60,000 P.S.I. AND A MINIMUM ELONGATION OF 10%.
   POST SHALL BE FABRICATED FROM MATERIAL CONFORMING TO ASTM DESIGNATION A36.
   ANCHOR BOLTS TO BE MADE FROM MATERIAL CONFORMING TO ASTM DESIGNATION A307.
6. CAULK EXPOSED OPENING BETWEEN SHIMS WITH LEAD WOOL.
7. GALVANIZE ENTIRE RAILING AFTER FABRICATION INCLUDING NUTS, WASHERS, SHIMS AND TOP 3½" OF ANCHOR BOLTS.

REVISED	STATE HIGHWAY COMMISSION OF WISCONSIN TUBULAR STEEL RAILING TYPE "H"
	DESIGN SPEC A.A.S.H.O. 61 LOADING —— CONST. SPEC. 1963
	DATE 9-23-64 DESIGN STD. DRAWN W.W. CKD. J.B.
STRUCTURE B-35-15	SHEET 8 OF 14

X29565