STATE PROJECT NUMBER	SHEET NO.
9859-07-71	

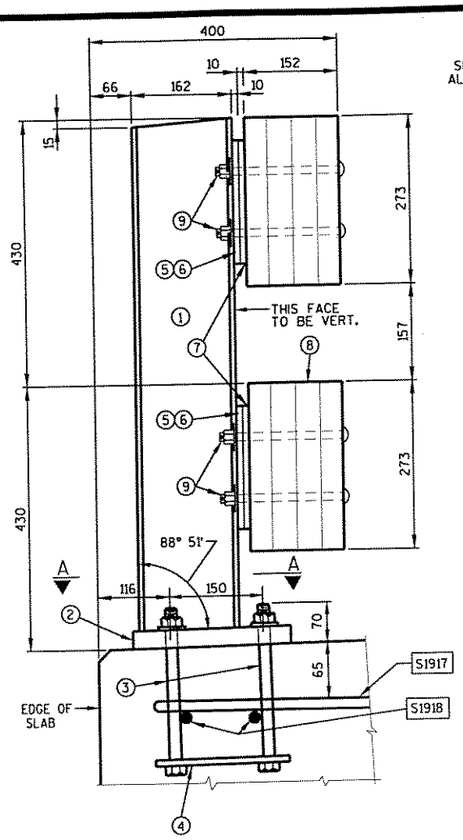

SECTION B THRU RAILING

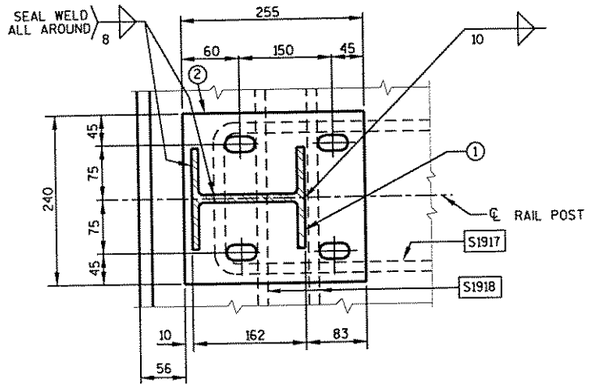

SECTION A

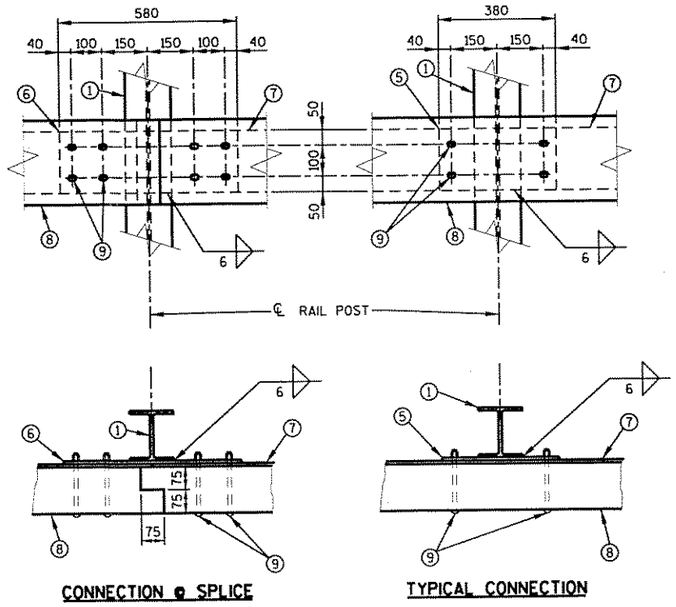

CONNECTION @ SPLICE

TYPICAL CONNECTION

RAIL TO POST CONNECTION DETAILS

LEGEND

1. W150x37. CUT BOTTOM OF POST TO MATCH CROSS SLOPE OF ROADWAY. PLACE POST VERTICAL. PLACE POST NORMAL TO GRADE LINE.
2. PLATE 25 mm x 240 mm x 255 mm WITH 27 mm x 40 mm SLOTTED HOLES FOR ANCHOR BOLTS 3. WELD TO 1 AS SHOWN.
3. A325M- M22 x 200 mm LONG HEX BOLT (ZINC COATED) WITH A325M NUT AND WASHER. 4 REQUIRED PER POST. THREAD 75 mm AND PLACE NORMAL TO PLATE 2. CHAMFER TOP OF BOLTS BEFORE THREADING. UDE 360 mm LONG AT POSTS ON WINGS.
4. 6 mm x 200 mm x 200 mm FLAT BAR, WITH 25 mm DIA. HOLES FOR ANCHOR BOLTS 3.
5. PLATE 10 mm x 380 mm x 200 mm WITH 4 - 18 mm x 25 mm SLOTTED HOLES FOR BOLTS 9. WELD TO 1 AS SHOWN.
6. PLATE 10 mm x 580 mm x 200 mm WITH 8 - 18 mm x 25 mm SLOTTED HOLES FOR BOLTS 9. WELD TO 1 AS SHOWN.
7. PLATE 10 mm x 200 mm WITH 18 mm HOLES FOR BOLTS 9 AND 15 mm HOLES FOR LAG BOLTS 10. BOLT TO PLATES 5 AND 6 AS SHOWN.
8. 152 mm x 273 mm GLULAM RAIL WITH 18 mm HOLES FOR BOLTS 9. CONNECT TO PLATE 7 WITH BOLTS 9 AND 10.
9. 15 mm DIA. x 200 mm LONG CARRIAGE BOLTS WITH HEX. NUT AND 50 mm WASHERS.
10. 12 mm DIA. x 100 mm LONG LAG BOLT.

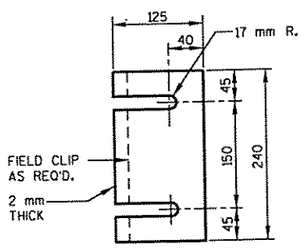

POST SHIM DETAIL
(4 PER POST)

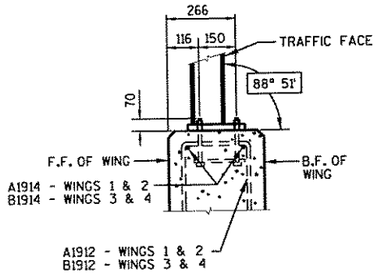

SECTION C THRU WINGS

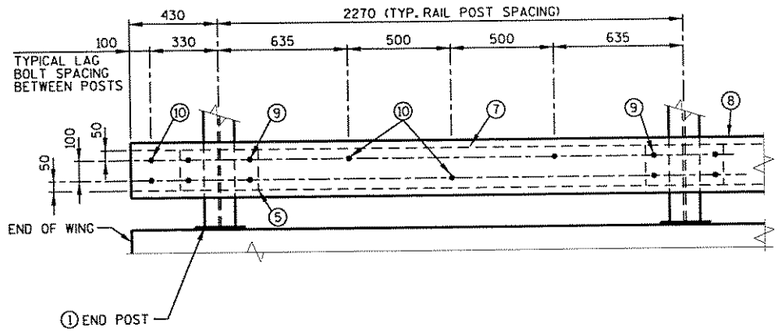

PART ELEVATION OF RAILING

GENERAL NOTES

BID ITEM SHALL BE "GLULAM ELEMENT RAILING", WHICH INCLUDES ALL ITEMS SHOWN.

RAILING SHALL BE FABRICATED WITH 3 SPLICES EACH SIDE OF BRIDGE. PANEL LENGTHS SHALL NOT EXCEED 6700 mm.

POSTS BASE PLATES, 2 SHALL BE FLAT WITH ALL SURFACES SMOOTH AND FREE FROM WARP AND ALL EDGES SMOOTH, STRAIGHT AND VERTICAL. ALL PLATE CUTS SHALL BE MACHINE OR MACHINE FLAME CUT.

ALL STEEL MATERIAL, EXCEPT LOWER 200 mm OF ANCHORAGE DETAIL (NO. 3 & 4) SHALL BE PAINTED TO MATCH COLOR OF GLULAM RAIL, SEE SPECIAL PROVISIONS.

FILL EXPOSED OPENINGS BETWEEN SHIMS AND POST ANCHOR BOLT HOLES WITH NON-STAINING GRAY NON-BITUMINOUS JOINT SEALER. SEAL BOTTOM EDGES OF PLATE 2 TO DECK.

ALL MATERIALS (EXCEPT GLULAM RAIL) USED IN FABRICATION SHALL BE MADE FROM MATERIALS CONFORMING TO A.S.T.M. DESIGNATION A709M GRADE 250 UNLESS NOTED OTHERWISE.

STEEL POST SHIMS MAY BE USED UNDER POSTS WHERE REQ'D. FOR ALIGNMENT.

PRIOR TO PAINTING, ALL STEEL RAILING POSTS AND STEEL PLATES SHALL BE GIVEN A NO. 6 BLAST CLEANING BY S.S.P.C. SPECIFICATIONS.

ALL POST SPACINGS ARE MEASURED HORIZONTALLY ALONG CENTERLINE OF POST BASE AT EDGE OF SLAB OR WING.

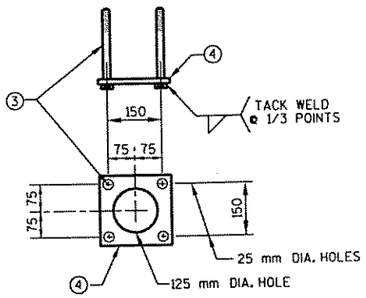

ANCHORAGE DETAIL

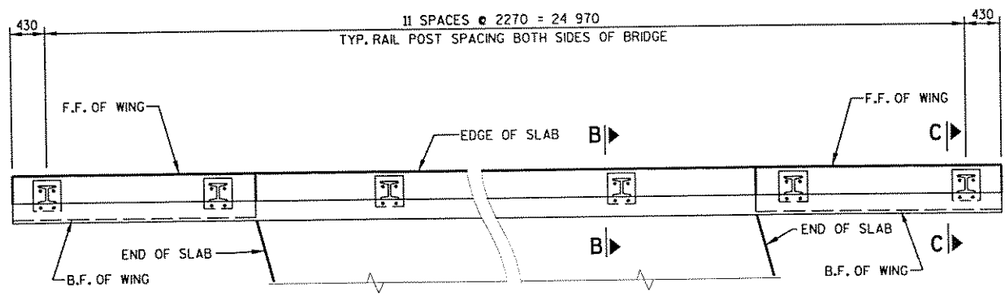

WINGS 2 & 4

PLAN OF RAILING

WINGS 1 & 3

No.	Date	Revision	By

STATE OF WISCONSIN
DEPARTMENT OF TRANSPORTATION

STRUCTURE B-35-136

Const. Spec. WI "96"	Drawn By RLR	Plans Checked JMB

GLULAM ELEMENT RAILING

SHEET 9 OF 9

PLOT SCALE:
MSA #: 93969109
REV. DATE: 9-3-97
ORIGINATOR: RLR
LEVELS ON - 1, 2, 3, 4, 5, 6, 7, 8, 9, 10, 11, 12, 13, 14, 15, 16, 17, 18, 19, 20, 21, 22, 23, 24, 25, 26, 27, 28, 29, 30, 31, 32, 33, 34, 35, 36, 37, 38, 39, 40, 41, 42, 43, 44, 45, 46, 47, 48, 49, 50, 51, 52, 53, 54, 55, 56, 57, 58, 59, 60.