STATE PROJECT NUMBER	SHEET NO.
9411-1-70	7.12

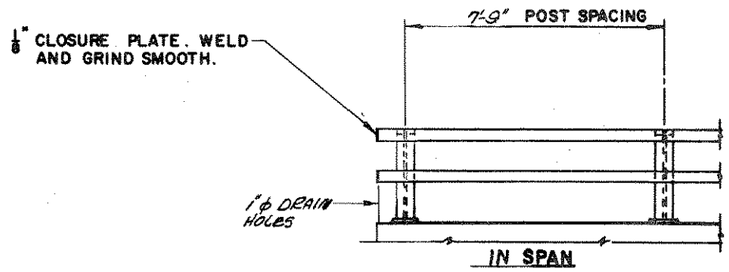

PART ELEVATION OF RAILING

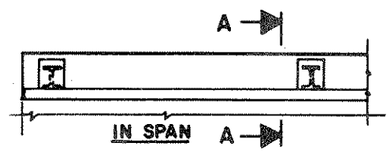

PART PLAN OF RAILING

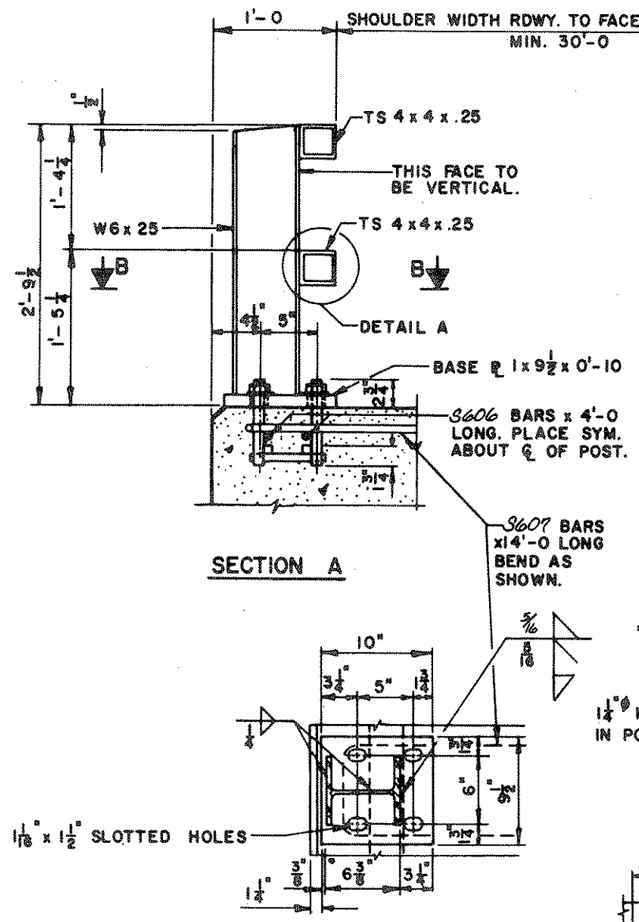

SECTION A

SECTION B

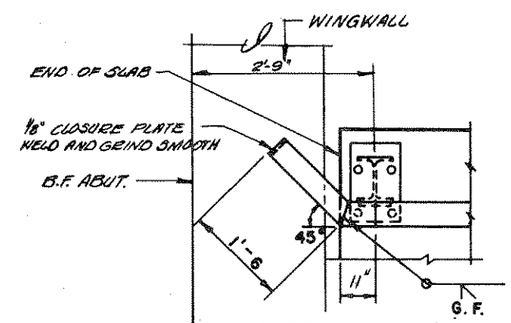

END DETAIL FOR WINGS AT RIGHT ANGLES TO ℄ RDWY.

GENERAL NOTES

1. BID ITEM SHALL BE 'TUBULAR RAILING, TYPE F'.
2. POST BASE PLATES SHALL BE FLAT WITH ALL SURFACES SMOOTH AND FREE FROM WARP AND ALL EDGES SMOOTH, STRAIGHT AND VERTICAL. ALL PLATE CUTS SHALL BE MACHINE OR MACHINE FLAME CUTS.
3. RAILING SHALL BE 4 x 4 x .25 STRUCTURAL TUBING CONFORMING TO A.S.T.M. DESIGNATION A36.
4. ANCHOR BOLTS SHALL BE 7/8" ϕ NOMINAL CONFORMING TO A.S.T.M. A325 WITH 3" THREAD.
5. CALK EXPOSED OPENINGS BETWEEN SHIMS.
6. POST, BASE PLATES AND SHIMS SHALL BE MADE FROM MATERIAL CONFORMING TO A.S.T.M. DESIGNATION A36. CUT BOTTOM OF POST TO MATCH CROSS SLOPE OF ROADWAY. PLACE POST NORMAL TO GRADE LINE.
7. PLACE ANCHOR BOLTS NORMAL TO BASE PLATE.
8. ALL MEMBERS, INCLUDING UPPER 4" OF ANCHOR BOLTS, SHALL BE GALVANIZED AFTER FABRICATION.
9. BEAM GUARD ATTACHMENT MAY BE WELDED TO RAILS AND RAILS MAY BE WELDED TO POSTS.
10. FILL POST ANCHOR BOLT HOLES WITH NON-STAINING GRAY NON-BITUMINOUS JOINT SEALER.

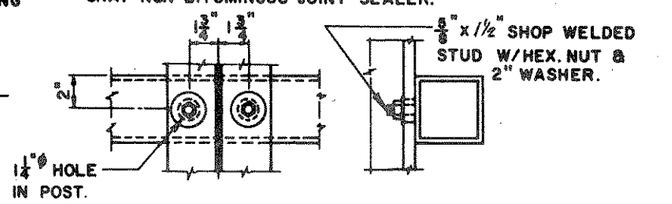

DETAIL A

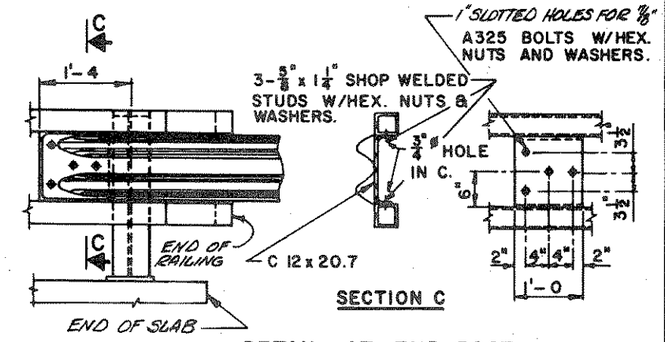

SECTION C

DETAIL AT END POST
(BEAM GUARD RAIL ATTACHMENT)

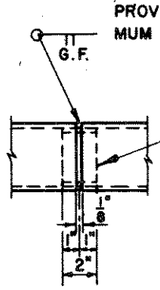

SHOP RAIL SPLICE DETAIL

LOCATION MUST BE SHOWN ON THE SHOP DRAWINGS.

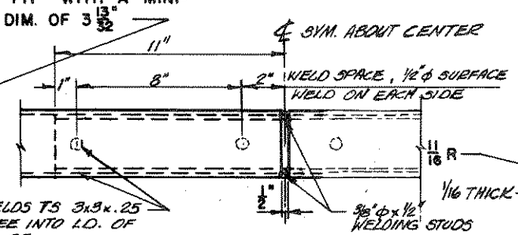

FIELD ERECTION JOINT DETAIL

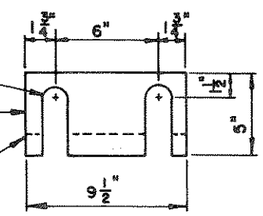

POST SHIM DETAIL
(4 PER POST)

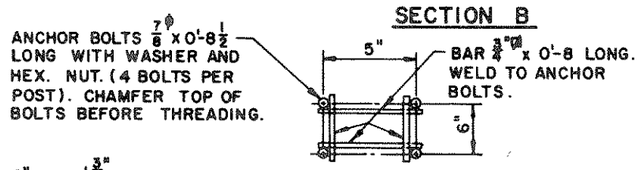

ANCHOR BOLT DETAIL

STATE OF WISCONSIN
DEPARTMENT OF TRANSPORTATION
DIVISION OF HIGHWAYS

STRUCTURE B-35-75

Const. Spec. 1975	Drawn By RJK	Plans Checked GRK
TUBULAR STEEL RAILING - TYPE "F"	SHEET 13 OF 13	
	X.58172	